# 7 Warren Street – Carlo Mandrone House

---



**Location**
7 WARREN ST
**MBLU**
54/ 54/ / /
**Owner**
MANDRONE CARLO D TRS
**Assessment**
$1,205,600
**PID**
3736
**Building Count**
1
**Current Value**

Assessment

| Valuation Year | Improvements | Land | Total |
|---|---|---|---|
| 2026 | $778,300 | $427,300 | $1,205,600 |

## Owner of Record

| | |
|---|---|
| **Owner** | MANDRONE CARLO D TRS |
| **Co-Owner** | MARGARET L RIHA TRS |
| **Address** | 7 WARREN ST<br>NEWBURYPORT, MA 01950 |
| **Sale Price** | $0 |
| **Certificate** | |
| **Book & Page** | 41512/0315 |
| **Sale Date** | 04/10/2023 |
| **Instrument** | 1F |

## Ownership History

Ownership History

| Owner | Sale Price | Certificate | Book & Page | Instrument | Sale Date |
|---|---|---|---|---|---|
| MANDRONE CARLO D TRS | $0 | | 41512/0315 | 1F | 04/10/2023 |
| MANDRONE CARLO D TRS | $0 | | 34605/0011 | 1F | 12/21/2015 |
| MANDRONE CARLO D | $375,000 | | 31169/0522 | 1O | 03/15/2012 |
| GADOMSKI ETHEL A TRUSTEE | $0 | | 24437/0072 | 1F | 06/20/2005 |
| GADOMSKI ETHEL A | $0 | | 4002/0184 | | |

## Building Information

### Building 1 : Section 1

| | |
|---|---|
| **Year Built:** | 2013 |
| **Living Area:** | 2,381 |

Building Attributes

| Field | Description |
|---|---|
| Style: | Bungalow |
| Model | Residential |
| Grade: | Above Avg |
| Stories: | 2 |
| Occupancy | 1 |
| Exterior Wall 1 | Clapboard |
| Exterior Wall | |
| Roof Structure: | Gable/Hip |
| Roof Cover | Asph/F Gls/Cmp |
| Interior Wall1 | Drywall/Sheet |
| Interior Wall | |
| Interior Flr | Hardwood |
| Interior Flr 2 | |
| Heat Fuel | Gas |
| Heat Type: | Forced Air-Duc |
| AC Type: | Central |
| Total Bedrooms: | 2 Bedrooms |
| Total Bthrms: | 2 |
| Total Half Baths: | 0 |
| Total Xtra Fixtrs: | 1 |
| Total Rooms: | 6 Rooms |
| Cndtn | |
| Num Park | |
| Fireplaces | |
| Fndtn Cndtn | |
| Basement | |

**Building Layout**

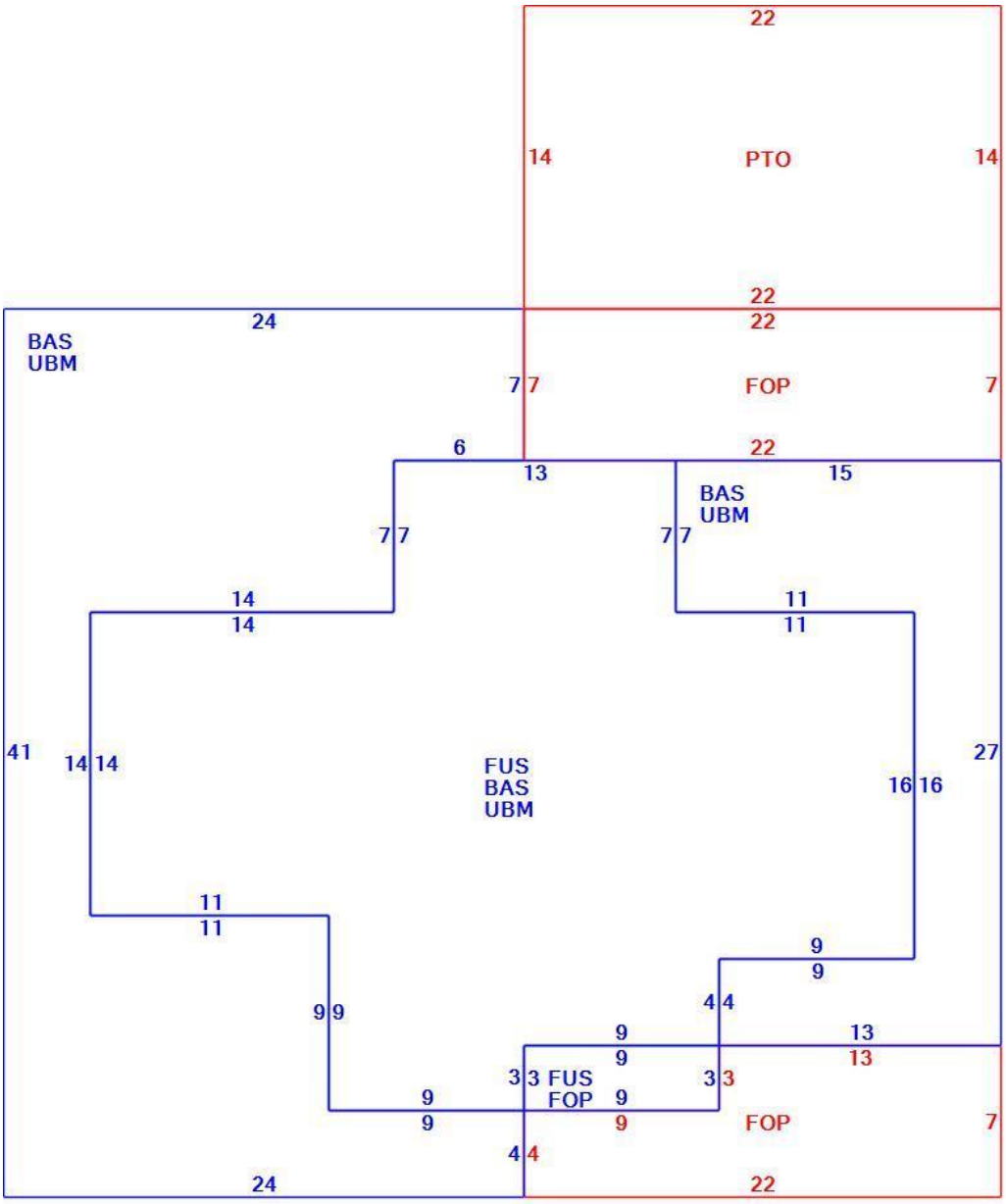


Building Sub-Areas (sq ft)Legend

| Code | Description | Gross Area | Living Area |
|---|---|---|---|
| BAS | First Floor | 1,578 | 1,578 |
| FUS | Upper Story, Finished | 803 | 803 |
| FOP | Porch, Open | 308 | 0 |
| PTO | Patio | 308 | 0 |
| UBM | Basement, Unfinished | 1,578 | 0 |

| | | | |
|---|---|---|---|
| | | 4,575 | 2,381 |

### Extra Features

Extra FeaturesLegend

| Code | Description | Size | Value | Bldg # |
|---|---|---|---|---|
| FPL4 | FIREPLACE, MNF | 1.00 UNITS | $1,800 | 1 |

### Land

### Land Use

**Use Code** 1010
**Description** SINGLE FAM

### Land Line Valuation

**Size (Acres)** 0.25
**Depth**

**Assessed Value** $427,300

### Outbuildings

OutbuildingsLegend

| Code | Description | Sub Code | Sub Description | Size | Value | Bldg # |
|---|---|---|---|---|---|---|
| FGR2 | GARAGE-GOOD | | | 528.00 S.F. | $20,000 | 1 |

### Valuation History

Assessment

| Valuation Year | Improvements | Land | Total |
|---|---|---|---|
| 2025 | $736,900 | $399,400 | $1,136,300 |
| 2024 | $687,100 | $363,000 | $1,050,100 |
| 2023 | $617,500 | $315,600 | $933,100 |

History of the House

Architecture: Vernacular

Year Built: 2013

History

Property owned by Ethel A Gamdoski. It was sold to Carlos Mandrone in 2012 and shortly thereafter, the house was constructed. It is presently under a joint ownership of two trusts: Carlos Mandrone TRS and Rita Margaret TRS.